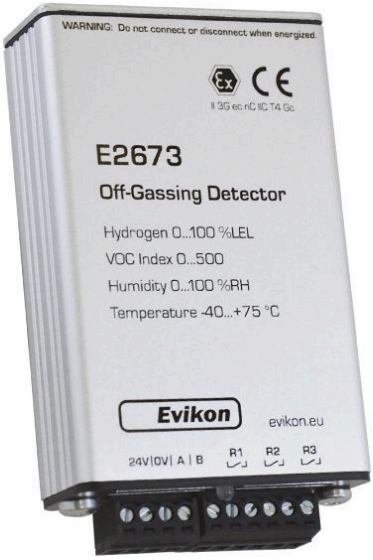

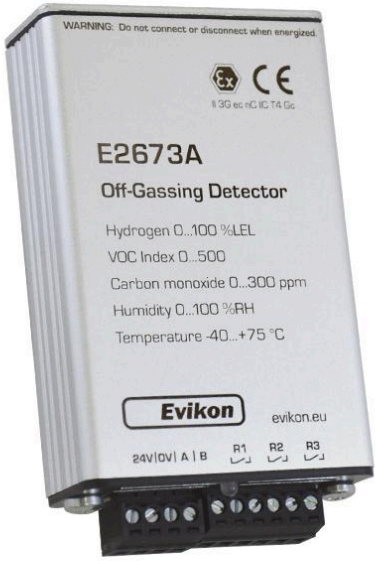

E2673

E2673A

Off-Gassing Detector

User Manual

Table of contents

Specifications 4
Product description 6
Dimensions 9
Operating conditions 11
Installation guidelines 12
    Application and placement 12
    Gas behavior in BESS applications 12
    Detector positioning 13
        Avoid installation 13
        Mounting and orientation 13
    Additional BESS-specific recommendations 14
Electrical connections 15
    Terminal layout and designations 16
Operation 18
    Startup and initialization 18
    Normal operation 18
    Alarm behavior 19
    Alarm activation and release 19
    Alarm behavior modes 20
        Automatic reset 20
        Delayed activation and deactivation 20
    Fail-safe operation 21
    Output indication 22
Fault monitoring and diagnostics 23
    Sensor-related faults 24
    Power supply faults 24
    Detector / system faults 25
    Communication faults 25
System conditions and outputs functions 26
Configuration 27
    Alarm configuration 27

Maintenance..... 29
Delivery set..... 30
Modbus RTU communication..... 31
RS485 communication interface..... 31
Communication parameters..... 31
Modbus holding registers..... 32

Revision history

Revision	Release date	Comment
Rev 11.05.2026	11.05.2026	First release of the manual
Rev 14.07.2026	14.07.2026	EN IEC 60079-2 and EN IEC 60079-3 standards have been removed

Specifications

Gas sensor technologies	Thermal conductivity for Hydrogen MOS for Volatile Organic Compounds Electrochemical for Carbon monoxide* Combined digital for Humidity & Temperature
Sensors lifetime	12~15 years
Sampling method	Diffusion / convection
Detection ranges	0…100 %LEL H2 0…500 VOC Index 0…300 ppm / 0…1000 ppm*
RH+T measurement range	0…100 %RH, -40…+75 °C
Hydrogen accuracy	< 3 %LEL H2 @ 0…50 %LEL < 6 %LEL H2 @ 50…100% LEL
RH+T accuracy	< 2 %RH < 0,3 °C
Resolution	0.02 %LEL H2 1 VOC Index 1 ppm CO* 0.01 %RH / 0.01 °C
Response time	< 20 s
Long-term stability	< 3 %LEL H2 during 5 years < 3 % of CO sensor range / year*
Calibration interval	No maintenance or field calibration needed
Operation ranges	-40…+75 °C, 0…100 %RH
Supply voltage	12…36 VDC
Power consumption	< 3 VA
Warm-up time	< 1 min

Self-diagnostics	Functionality check at startup and continuously
Visual indication	Multi-color LED for alarm / fault / operational (Green, Red, Yellow)
Relay outputs	Three SPST relays (2 x Alarm, 1 x Fault) rated 300 mA, 30 VDC
Alarm setpoints	User configurable for H2, VOC and CO*
Digital interface	RS485 Modbus RTU 19200 baud rate, 8 data bits, parity none, 1 stop bit
Enclosure	Natural anodized aluminium alloy, protection class IP40, DIN rail mounting bracket
Dimensions	H94 × W56 × D32 mm
Regulations	Directives 2014/30/EU, 2014/34/EU EN IEC 61010-1, EN IEC 60079-0, EN IEC 60079-7, EN IEC 60079-29-0, EN IEC 60079-15 * UL2075 (CO sensor) FM 6320 (pending)
Operating conditions	Safe areas and ATEX Zone 2 Pollution degree PD2
Ex protection	II 3G Ex ec nC IIC T4 Gc

* CO gas detection only for type E2673A

Product description

The E2673 gas detector is designed for reliable monitoring of hydrogen concentration, volatile organic compounds (VOC), and ambient temperature and humidity in safety-critical applications. It is primarily intended for use in battery energy storage systems (BESS), where early detection of off-gassing and battery-related faults is essential for safe operation, while also being well suited for Data Centers and UPS rooms where continuous supervision of backup power systems is required to maintain system uptime and prevent equipment damage.

In such environments, the device enables early detection of battery off-gassing, insulation degradation, and overheating components associated with energy storage and power infrastructure. Continuous monitoring of hydrogen levels and VOC trends allows early identification of developing faults, supporting predictive maintenance and reducing the risk of unexpected failures.

The E2673A type additionally provides carbon monoxide (CO) detection for enhanced early warning of thermal events.

The device combines multiple sensing technologies to ensure accurate and stable measurement. Hydrogen is detected using a calibration-free thermal conductivity sensor providing %LEL output, while VOC levels are monitored using a calibration-free metal-oxide semiconductor (MOS) sensor capable of generating a normalized VOC index.

Unlike single-gas measurements, the VOC index represents the overall level and variation of volatile organic compounds present in the surrounding air over time. The sensor continuously evaluates both short-term and long-term changes in VOC background concentration and converts these variations into a normalized index value. This enables detection of abnormal environmental changes associated with electrolyte evaporation, insulation degradation, overheating materials, or early-stage battery venting events.

Because the VOC index is trend-based rather than tied to a single gas component, it is particularly effective for identifying gradual changes that may precede hazardous gas accumulation. Rising VOC index values can therefore provide early

indication of battery leakage or developing thermal stress before measurable hydrogen accumulation occurs, supporting predictive maintenance and improved safety in battery energy storage systems.

In the E2673A type, an additional long-life electrochemical sensor is used for precise CO detection.

Ambient temperature and humidity are monitored using a high-precision digital sensor with integrated compensation.

With a detection range of 0…100 %LEL for hydrogen and continuous VOC trend evaluation, the E2673 delivers fast and dependable response to hazardous conditions. Advanced signal validation and sensor plausibility monitoring minimize false alarms and ensure reliable operation under dynamic environmental conditions.

Engineered for integration into battery systems, the E2673 features a compact DIN rail-mounted enclosure with robust construction suitable for demanding environments. Its wide operating temperature and humidity range, combined with internal compensation mechanisms, ensures stable performance over time.

The detector includes three relay outputs for system control and safety signaling. Two relays are dedicated to independently configurable alarm channels, while a third relay provides fault indication. All relay outputs are continuously monitored to verify correct actuation. A multi-color LED indicator provides clear visual status signaling, distinguishing between normal operation, alarm levels, and fault conditions through defined color and blinking patterns.

To meet safety requirements, the E2673 incorporates comprehensive self-diagnostics and system supervision, including hardware watchdog monitoring, power supply supervision, signal reference validation, relay feedback verification, and continuous sensor integrity checks. Any detected fault condition forces the device into a defined safe state with de-energized outputs and clear fault indication, ensuring predictable and fail-safe behavior.

Two independent alarm channels are available, each configurable to monitor hydrogen concentration or a combination of hydrogen and VOC levels (and CO for

the E2673A type). User-defined thresholds and configurable delay times allow flexible adaptation to specific safety strategies while preventing false triggering due to transient conditions.

For communication and configuration, the E2673 is equipped with an RS-485 interface supporting Modbus RTU protocol. This enables seamless integration into control systems, allowing real-time access to measured values such as hydrogen concentration (%LEL), VOC index, temperature, humidity, and carbon monoxide concentration (E2673A), as well as configuration of alarm parameters.

The device is designed for long-term operation with minimal maintenance. Its sensors offer high stability and long service life, supported by continuous self-monitoring to ensure operational reliability without the need for frequent manual calibration.

Overall, the E2673 provides a robust and safety-oriented solution for multi-parameter gas detection in battery energy storage systems, combining early VOC-based leakage detection, reliable hydrogen monitoring, optional CO detection, and advanced safety features for modern energy storage applications.

Dimensions

All dimensions of the E2673 gas detector are specified in millimeters (mm). The following drawing provides a complete overview of the device geometry, including overall enclosure dimensions, mounting points, and terminal locations.

The compact DIN rail-mounted design enables installation in space-constrained battery energy storage systems while maintaining sufficient clearance for wiring, airflow, and service access. Proper adherence to the indicated dimensions and mounting guidelines ensures secure installation, reliable gas diffusion to the sensing elements, and dependable long-term operation.

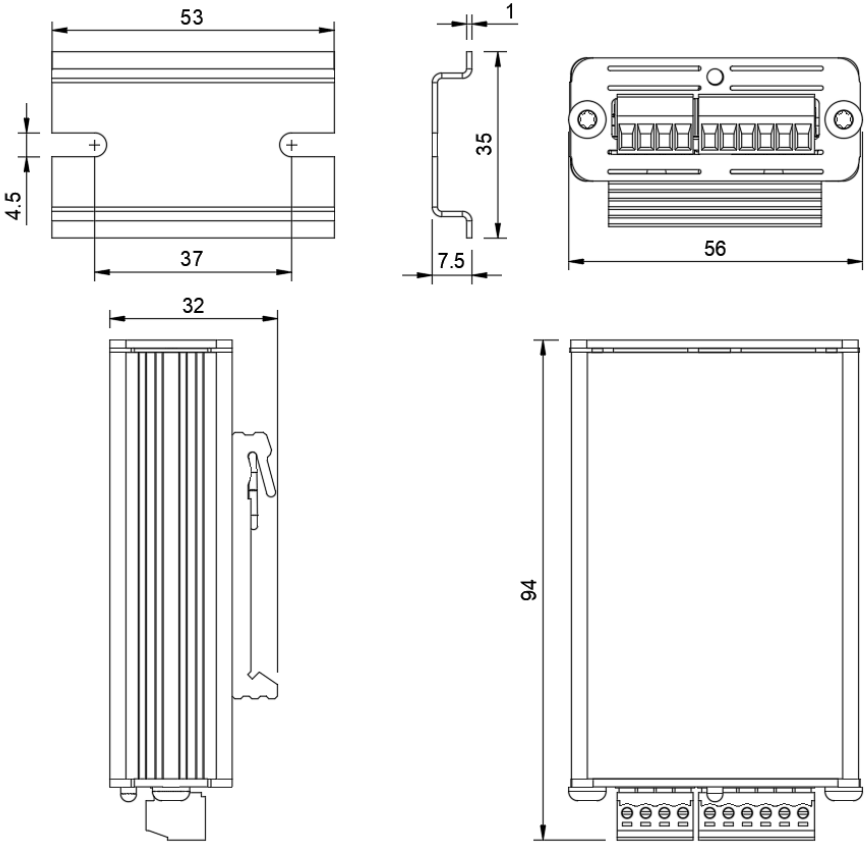

Safety requirements

- Misuse will impair the protection of the product. Always adhere to the safety provisions applicable in the country of use.
- Do not perform any maintenance operation with the power on. Do not let water or foreign objects inside the device.
- Connection diagrams can be found in the section “Electrical connections”. The device might not perform correctly or be damaged if the wrong power supply is connected.
- External circuits connected to the equipment should have a sufficient insulation rating according to the environmental conditions and equipment power.
- A clearly marked and easily accessible disconnecting device should be included in the installation of this product.

Operating conditions

The device is intended for use in ATEX Zone 2 or safe indoor areas under normal atmospheric conditions, within a relative humidity range of 0…100 %RH (non-condensing), and in environments corresponding to the basic electromagnetic conditions defined in EN 61326-1.

For reliable operation in battery energy storage systems, the detector should be installed in locations with adequate natural or forced airflow to allow representative gas diffusion to the sensing elements. Metal-oxide (MOS) sensors require normal ambient oxygen concentration for proper operation and are not suitable for use in low-oxygen or oxygen-free atmospheres.

The device should be protected from strong mechanical shock, excessive vibration, corrosive atmospheres (H2S, SO2, HCl, Cl2, etc.), and environments heavily contaminated with conductive dust, oil mist, or chemical vapors. Installation in direct sunlight or near significant heat sources should be avoided, as rapid temperature or humidity changes may temporarily influence sensor response and measurement stability.

Installation guidelines

Before proceeding with installation, it is mandatory to read the section “Safety Requirements” and ensure full compliance with all listed instructions. Installation practices in accordance with applicable standards, such as EN 60079-29-2, are recommended for additional guidance.

Application and placement

The effectiveness of gas detection depends strongly on the installation location. The following aspects should be evaluated:

- Room or enclosure geometry
- Airflow direction and velocity
- Locations of potential gas release (e.g., battery racks, cable entries, venting points)

Gas behavior in BESS applications

In battery energy storage systems, gas behavior varies depending on the type of emission:

- Hydrogen is significantly lighter than air and rises rapidly. It tends to accumulate in upper sections of enclosures, near ceilings, or under covers and structural elements.
- VOCs generated during early-stage battery leakage may disperse more evenly or remain localized depending on airflow conditions. These gases can be detected earlier than hydrogen and provide an early warning of abnormal battery conditions.
- CO has a density close to air and typically disperses uniformly. It may indicate thermal events or incomplete combustion processes.

Understanding these behaviors is essential for optimal detector placement.

Detector positioning

- For early leakage detection, install the detector as close as possible to potential sources such as battery modules or racks.
- For hydrogen detection, positioning in the upper part of the enclosure (e.g., near ceiling level) is recommended.
- For VOC early detection, placement closer to potential leakage sources may improve response time.
- For general area monitoring, detectors should be distributed evenly to ensure uniform coverage across the installation.

Avoid installation

- Near ventilation outlets or strong airflow paths, where gas may be diluted or displaced
- In areas with turbulent or forced air movement, which can affect measurement stability
- In dead zones such as corners, recesses, or enclosed spaces with limited air circulation

Mounting and orientation

The E2673 must be installed in an upright position to ensure proper sensor operation.

The device should be mounted in a location that allows easy access for inspection, maintenance, and service.

Installation is performed using the supplied mounting bracket. Attach the bracket securely to the wall or panel, then fix the device onto the bracket (*see chapter Dimensions*).

Additional BESS-specific recommendations

In containerized BESS systems, detectors are typically installed:

- Above battery racks (for hydrogen detection)
- Along central aisles or service corridors (for general monitoring)
- In rack-based systems, consider installing detectors at multiple vertical levels if airflow is restricted.
- Ensure detectors are not obstructed by structural elements, cabling, or enclosures.
- Coordinate detector placement with ventilation system design to ensure that gas accumulation points are effectively monitored.

Proper installation is essential to ensure reliable detection performance, early fault detection, and compliance with safety requirements in battery energy storage systems.

Electrical connections

The E2673 gas detector is designed for simple and efficient electrical installation in battery energy storage systems (BESS). All electrical connections are made via pluggable terminal blocks, enabling fast wiring, simplified servicing, and reduced installation errors.

The terminals are clearly grouped by function, combining power supply, communication interface, and relay outputs in a compact and accessible layout. The use of pluggable connectors allows pre-wiring of the installation harness and simplifies device replacement or maintenance without disconnecting individual field wires.

The device operates from a 12…36 VDC supply. Correct polarity and stable supply voltage within the specified operating range must be ensured during installation. The integrated RS-485 interface supports Modbus RTU communication for system integration, configuration, and measurement monitoring.

Three relay outputs are provided for external signaling and control:

- Alarm 1
- Alarm 2
- Fault indication

The relay outputs are intended for switching low-voltage control circuits (up to 30 VDC) and must be connected according to the requirements of the target system. Wiring and protection methods shall comply with applicable electrical and safety regulations. To ensure reliable communication in electrically noisy industrial environments, the use of shielded twisted-pair cable is recommended for the RS-485 interface. Communication wiring should be routed separately from power wiring where possible.

Before applying power, all wiring and terminal connections should be verified carefully. Incorrect wiring, reversed polarity, or improper grounding may result in malfunction or damage to the device.

Terminal layout and designations

The diagram below illustrates the terminal layout of the E2673 gas detector and the corresponding signal designations. All electrical connections are accessible via pluggable terminal blocks and are grouped by function to simplify installation, commissioning, and servicing.

The terminal layout includes connections for:

- Power supply (12…36 VDC)
- RS-485 communication (Modbus RTU)
- Relay outputs (Alarm 1, Alarm 2, Fault)

All terminals are clearly identified on the device housing. The terminal names and signal designations shown in the diagram correspond directly to the markings on the enclosure and shall be followed during installation.

Correct wiring of all power, communication, and output signals must be ensured before applying power to the device. Incorrect wiring or polarity may result in malfunction, communication errors, or permanent damage to the instrument. All connections should therefore be verified against the terminal diagram prior to commissioning.

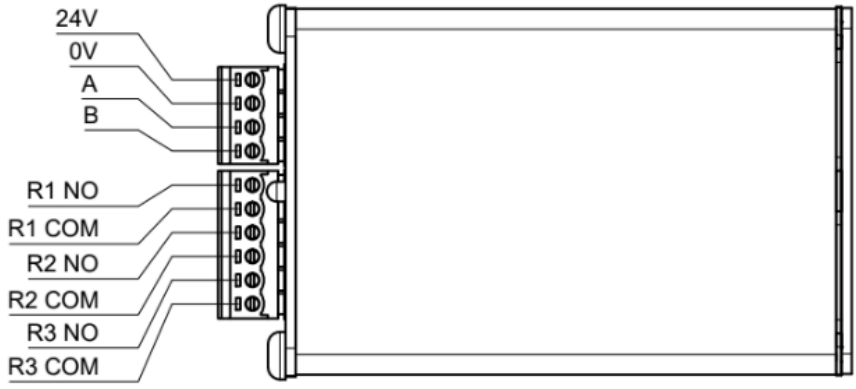

The terminal arrangement is designed to support flexible integration into battery energy storage systems and associated safety and monitoring infrastructure, including battery management systems (BMS), energy management systems (EMS), PLCs, fire safety systems, and other industrial automation equipment.

Proper wiring in accordance with this table ensures correct device operation, reliable signal transmission, and safe interaction with connected systems. The following table describes the terminal block layout and provides a detailed overview of all available electrical connections, including power supply, RS-485 communication interface, and relay output signals.

Terminal	Meaning
+U	(24 V) Power supply +
0V	(0V) Power supply -
A	RS-485 A (+)
B	RS-485 B (-)
R1 NO	Alarm 1 SPST Normally open contact
R1 COM	Alarm 1 SPST Common contact
R2 NO	Alarm 2 SPST Normally open contact
R2 COM	Alarm 2 SPST Common contact
R3 NO	Fault SPST Normally open contact
R2 COM	Fault SPST Common contact

All electrical connections must be performed in accordance with applicable standards and installation requirements.

Operation

The E2673 gas detector continuously monitors hydrogen concentration, VOC index, and ambient temperature and humidity using integrated sensing elements. The measured signals are processed internally and evaluated to control the following functions:

- Visual indication (multi-color LED)
- Electrical outputs (relay outputs: Alarm 1, Alarm 2, Fault)
- Communication data (RS-485, Modbus RTU)

In the E2673A variant, carbon monoxide (CO) concentration is additionally monitored and included in alarm evaluation and communication data.

Startup and initialization

After power is applied, the device starts automatically and performs internal self-diagnostics. During this phase, the system checks hardware integrity, initializes sensors, and prepares for normal operation.

- Warm-up time: < 60 seconds

Sensor signals stabilize during this period, and outputs remain in a defined safe state. Once initialization is successfully completed, the detector enters normal operation mode.

Normal operation

In normal operation, the device continuously measures hydrogen concentration, VOC index, and environmental parameters, and compares the measured values against two configurable alarm thresholds for each measured parameter.

Depending on configuration, each alarm channel can be assigned to:

- Hydrogen concentration
- Combined hydrogen and VOC index *(and CO concentration for E2673A)*

Based on this evaluation, the detector controls:

- Alarm and fault relay outputs
- LED status indication
- Communication data via Modbus RTU

Measurement processing, validation, and output updates are performed cyclically, once per second. This ensures fast and reliable response to changing conditions and enables early detection of battery-related off-gassing events.

Alarm behavior

The E2673 supports two independent alarm levels which are controlling device relay outputs independently:

- Alarm 1 (RE1)
- Alarm 2 (RE2)

Each alarm channel can be individually configured via Modbus registers, allowing flexible adaptation to system-specific safety requirements in battery energy storage applications.

Alarm activation and release

Each alarm channel operates using a dual-threshold mechanism with configurable high (activation) and low (release) setpoints. This introduces hysteresis, ensuring stable and predictable switching behavior. An alarm condition is triggered when the measured value exceeds the configured high setpoint for the selected parameter(s).

Once activated, the alarm remains active until the parameter(s) measured value decreases below the corresponding low setpoint. This separation between activation and release thresholds prevents rapid switching when the measured value fluctuates near the limit, ensuring reliable operation under dynamic conditions while also allowing multi-parameter detection in a single output.

For configurations using multiple parameters (e.g., hydrogen + VOC, or including CO in E2673A), the alarm logic evaluates all selected inputs according to the configured criteria, and the alarm is activated when the defined conditions are met.

Alarm behavior modes

The behavior of each alarm output is defined by timing, reset logic, and fail-safe configuration.

Automatic reset

Alarms are non-latchable. Once the measured value falls below the configured release threshold, the alarm condition is cleared automatically without external intervention.

Delayed activation and deactivation

Each alarm channel includes a configurable delay time (0…1000 seconds) that applies to both activation and deactivation.

Activation: The measured value must exceed the high setpoint continuously for the configured delay time before the alarm is activated.

Deactivation: The measured value must remain below the low setpoint continuously for the same delay time before the alarm is cleared.

This symmetric timing behavior ensures consistent filtering of transient conditions in both directions, preventing false triggering as well as premature reset.

Fail-safe operation

The E2673 supports fail-safe output behavior to ensure reliable signaling of alarm, fault, and power loss conditions.

The fault relay (RE3) always operates in fail-safe mode. Under normal operation, the relay is energized. In the event of an internal fault, watchdog reset, or power loss, the relay is de-energized, signaling the fault condition to the external control system.

The alarm relays (RE1 and RE2) are user-configurable and can operate in either:

- Standard mode (NO logic) — relays energize during an alarm condition
- Fail-safe mode (NC logic) — relays remain energized during normal operation and de-energize during an alarm condition

Regardless of the selected alarm logic, both alarm relays are forced into the de-energized state whenever a fault condition or power loss is detected. This guarantees a defined and predictable safe output condition under abnormal operation.

This output architecture ensures that alarms, device faults, and loss of power are reliably communicated to the external control system while supporting integration into different safety concepts and control strategies.

Output indication

The E2673 provides clear indication of system status through relay outputs and a multi-color LED. These outputs reflect the evaluated alarm and fault conditions in real time.

Relay outputs:

- RE1: Alarm 1
- RE2: Alarm 2
- RE3: Fault indication

Each relay changes state according to the configured alarm logic and operating mode (fail-safe inverted logic). Relay states are continuously supervised to ensure correct operation and can also be monitored via Modbus registers.

LED Indication:

The multi-color LED provides immediate visual feedback of the device status:

- Green (steady): Normal operation (no alarm, no fault)
- Red blinking (1 Hz): Alarm 1 active
- Red blinking (2 Hz): Alarm 2 active
- Yellow (blinking / constantly ON): Fault condition

The LED indication always reflects the highest priority state (Fault > Alarm 2 > Alarm 1 > Normal).

Fault monitoring and diagnostics

The E2673 incorporates continuous fault monitoring and diagnostic functions to ensure reliable operation and compliance with safety requirements. All critical detector system components are supervised during startup and throughout normal operation.

At power-up, the device performs an internal self-check to verify correct initialization of hardware, configuration, and measurement functions. Only after successful completion of these checks does the system enter normal operation mode.

During operation, the device continuously monitors:

- Sensor integrity and measurement plausibility
- Power supply conditions and internal reference signals
- Relay actuation and feedback consistency
- System execution (watchdog supervision)

In the event of a fault:

- A fault indication is activated via the LED (yellow)
- The fault relay (RE3) is released (fail-safe)
- Measurement validity may be suspended or flagged via communication interface
- The fault condition is latched and continuously indicated as long as the issue persists

Where possible, the system attempts automatic recovery (e.g., sensor reinitialization). If the fault condition is cleared, the device returns to normal operation.

This diagnostic concept ensures that internal failures, sensor errors, and abnormal operating conditions are reliably detected and clearly communicated to the external system, maintaining safe and predictable device behavior. In fault conditions, gas measurement or detector operation may be affected and must not be relied upon until the issue is resolved.

Sensor-related faults

The device detects abnormal sensor behavior or invalid measurement values.

Possible causes

- Sensor degradation or failure
- Disconnected or improperly connected sensor
- Exposure to extreme environmental conditions

Recommended action

- Restart the device
- Replace the detector or contact service if the issue persists

Power supply faults

The supply voltage is outside the permitted operating range.

Possible causes

- Incorrect power supply
- Voltage drop or unstable power source
- Wiring issues

Recommended action

- Verify supply voltage and specifications
- Check wiring and connections
- Ensure stable power source

Detector / system faults

Internal error detected during initialization or operation.

Possible causes

- Internal hardware malfunction
- Initialization failure
- Invalid configuration

Recommended action

- Power cycle the device
- Verify configuration settings
- Contact technical support if the issue persists

Communication faults

The communication interface is not functioning correctly.

Possible causes

- RS485 wiring or polarity issue
- Incorrect communication parameters

Recommended action

- Check wiring and polarity
- Verify communication settings
- Restart device or interface

System conditions and outputs functions

The detector uses visual LED and relay outputs to indicate different operating and fault conditions. These signals allow quick identification of the device status and enable reliable integration into external control systems.

The following table provides a general overview of common situations handled in the system of the gas detector.

Condition	LED color	LED function	RE 1*	RE 2**	RE 3
Normal operation	Green	On	De-energized	De-energized	Energized
Sensor startup	Yellow	1 Hz, 10% On	De-energized	De-energized	Energized
Sensor fault	Yellow	0.5 Hz, 50% On	De-energized	De-energized	De-energized
Hardware / parameter fault	Yellow	1 Hz, 50% On	De-energized	De-energized	De-energized
System fault	Yellow	On	De-energized	De-energized	De-energized
Alarm	Red	1 Hz, 50% On	Energized	Energized	Energized
Alarm failure	Yellow	1 Hz, 10% On	De-energized	De-energized	De-energized

** Depending on the normal operating state configuration of the output (user selectable), may be energized or de-energized, the following table describes when outputs are normally de-energized.*

Configuration

The E2673 can be configured using dedicated configuration software provided by the manufacturer, offering a simple and efficient way to adjust device parameters.

Configuration is performed via the RS-485 interface using Modbus RTU communication. The configurator software provides a user-friendly interface, allowing access to device settings without the need to work directly with Modbus registers.

All configuration changes are transmitted via Modbus RTU, handled automatically by the configurator software. This ensures reliable parameter transfer and simplifies integration into production or service workflows.

A standard configuration kit typically includes:

- USB to RS-485 converter
- Configuration software

Additional accessories may be used for service and verification purposes where applicable.

For advanced configuration, system integration, or direct communication, detailed information is provided in the section “Modbus RTU communication” of this manual.

Alarm configuration

Each relay (RE1 and RE2) includes the following configurable parameters:

- Independent low and high setpoints for hydrogen concentration and VOC index
- Configurable alarm delay (0…1000 seconds) to suppress transient conditions
- Selectable active logic (NO or NC)

Hydrogen setpoints are configurable in the range of:

- 500…2500 (0.01 %LEL) → equivalent to 5…25 %LEL

VOC setpoints are configurable in the range of:

- 150…500 VOC Index

Each alarm can be configured to evaluate:

- Hydrogen concentration
- VOC index
- Combined hydrogen and VOC condition

In the E2673A type, CO concentration can additionally be included in alarm evaluation where the setpoints are configurable in the range of 0…1000 / 0…300 ppm depending on sensor range.

Maintenance

- ! Do not perform any maintenance operation with the power on.
- ! Clean the device with a soft, damp cloth.
- ! Do not use any abrasive cleaning agents.
- ! Do not immerse the device in water or any cleaning media.
- ! Regular inspection of the sensor probe and filter is recommended to ensure reliable operation.

Delivery set

E2673 version with fixed sensor:

- Detector E2673
- Installation bracket
- Mounting accessories:
    - 4 screws with plastic dowels

Modbus RTU communication

RS485 communication interface

COM options	Modbus functions
Databits: 8 Parity: none Stop bits: 1 Baud rate: 19200 Protocol: Modbus RTU	03 – Read multiple registers 06 – Write a single register

Communication parameters

Parameter	Permitted values	Default
Slave ID	1…247	1
Data bits	8	8
Parity	None	None
Stop bits	1	1
Protocol	Modbus RTU	
Modbus functions	03 - Read holding registers 06 - Write single holding register	
Error codes	01 – Illegal function 02 – Illegal data address 03 – Illegal data value 04 – Slave device failure	

Modbus holding registers

Register addresses are shown 0-based, Address in hexadecimal, Register in decimal format. All 32-bit registers are in big-endian format.

Register	RW*	Description	Supported values	Default
1	R	Hardware ID		2673
2 3	R	Serial number	0…4294967295	-
4	RW	Modbus ID**	1…247	1
5	R	Software version	-	-
6 7	R	Software Timestamp	-	-
17	RW	Software restart	42330 → Restart system	-
211	RW	Alarm 1 parameter	0 → No detection 1 → H2 detection 2 → VOC detection 3 → CO detection*** 4 → H2 & VOC detection 5 → H2 & CO detection*** 6 → VOC & CO detection*** 7 → Detection of all	1
212	RW	Alarm 2 parameter		1
213	R	Alarm 1 state	0 → Inactive 1 → Active 2 → Failure	-
214	R	Alarm 2 state		-

215	RW	Alarm 1 delay	0…1000	10
216	RW	Alarm 2 delay		
217	RW	RE 1 active state	0 → Output normal 1 → Output fail-safe	0
218	RW	RE 2 active state		
221	RW	Alarm 1 Hydrogen release point	500…2500 (5…25% LEL)	500
222	RW	Alarm 1 Hydrogen setpoint		750
223	RW	Alarm 2 Hydrogen release point		1250
224	RW	Alarm 2 Hydrogen setpoint		2000
225	RW	Alarm 1 VOC index release point	150…500 (150…500 VOC index)	150
226	RW	Alarm 1 VOC index setpoint		200
227	RW	Alarm 2 VOC release point		250
228	RW	Alarm 2 VOC setpoint		400
229	RW*****	Alarm 1 Hydrogen state	-1 → Failure, 0 = Disabled 1 →Idle, 2 →Delay 3 → Reserved 4 →Active 6 → Reserved 7 → Reserved 8 → Inhibited***** Write***** 40970 - Inhibit alarm for configuration	-
230	RW*****	Alarm 1 VOC index state		
231	RW*****	Alarm 2 Hydrogen state		
232	RW*****	Alarm 2 VOC index state		
233	RW*****	Alarm 1 CO state		
234	RW*****	Alarm 2 CO state		

245	RW	Alarm 1 CO release point	0…1000	20
246	RW	Alarm 1 CO setpoint	0…1000	25
247	RW	Alarm 2 CO release point	0…1000	28
248	RW	Alarm 2 CO setpoint	0…1000	35
256	R	Temperature	-4000…+8500 (-40…85.00 °C)	-
257	R	Relative humidity	0…10000 (0…100.00 %RH)	-
258	R	VOC index	0…500 (0…500 VOC Index)	-
259	R	Hydrogen (%LEL)	0…10000 (0…100.00 %LEL)	-
265 266	R	Hydrogen (ppm)	0…40000 (0…40000 ppm)	-
268	R	Carbon monoxide***	0…1000 (0…1000 ppm)	-
300	R	Measured supply voltage, 0.01 V	0…3600	-
310	R	Uptime second	0…60	-
311	R	Uptime minute	0..60	-
312	R	Uptime hour	0…23	-

313	R	Uptime day	0…65535	-
315****	RW	CO calibration slope***	1…65535	512
316****	RW	CO calibration zero***	-32767…32768	0
322****	RW	Hydrogen calibration slope	1…65535	512
323****	RW	Hydrogen calibration zero	-32767…32768	0

* – Is register readable and writable (RW) or only readable (R)

** – The new value is applied after a restart

*** – CO detection only supported on E2673A

**** – Writing allowed only through calibration access

***** – Since software version 0x2010

Disposal

Gas sensors and gas detection equipment shall not be disposed of as general waste. At the end of life, the instrument, sensors, and any associated electronic components must be handled in accordance with all applicable local, national, and regional regulations governing electrical and electronic waste (e-waste), hazardous waste, and chemical waste.

Gas sensors may contain electrolytes, metals, or other materials that require controlled disposal. These components shall be removed, where applicable, and processed through approved recycling or hazardous-waste channels. Calibration gas cylinders and pressurized components must be returned to the supplier or disposed of through licensed gas or chemical waste handlers.

Where required by law or site policy, disposal shall be performed by certified waste contractors, and appropriate documentation shall be retained. Recycling is encouraged where permitted and safe. In case of uncertainty, the manufacturer or local regulatory authority should be consulted.

Disclaimer

This document is subject to change.

The latest and actual version is located on the Manufacturer's web page.

Warranty

This product is warranted to be free from defects in material and workmanship for a period of one year from the date of the original sale. During this warranty period, the Manufacturer will, at its option, either repair or replace a product that proves to be defective. This warranty is void if the product has been operated in conditions outside the ranges specified by the Manufacturer or damaged by customer error or negligence, or if there has been an unauthorized modification.

Manufacturer contacts

Evikon MCI OÜ

Teaduspargi 9, Tartu
50411 Estonia
info@evikon.eu
www.evikon.eu

